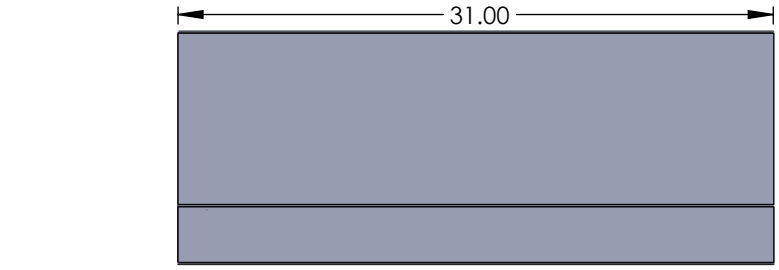

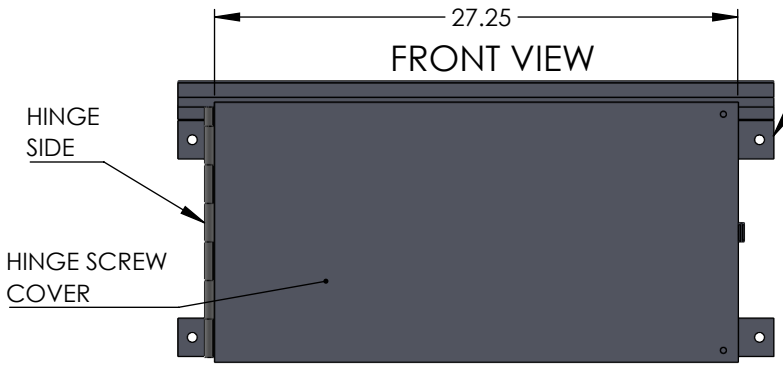

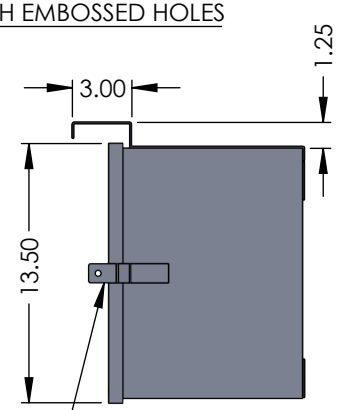

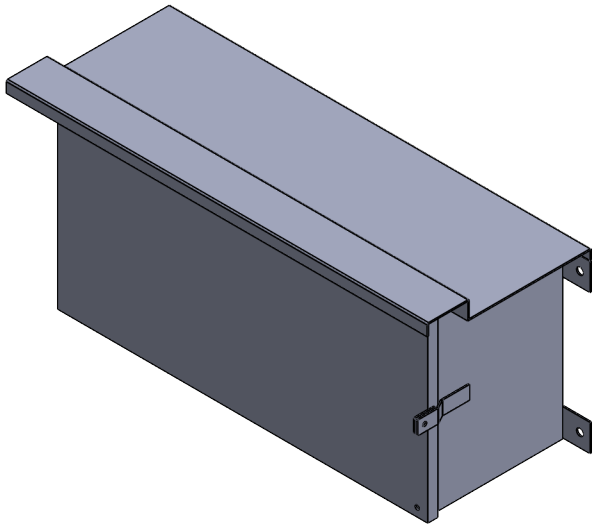

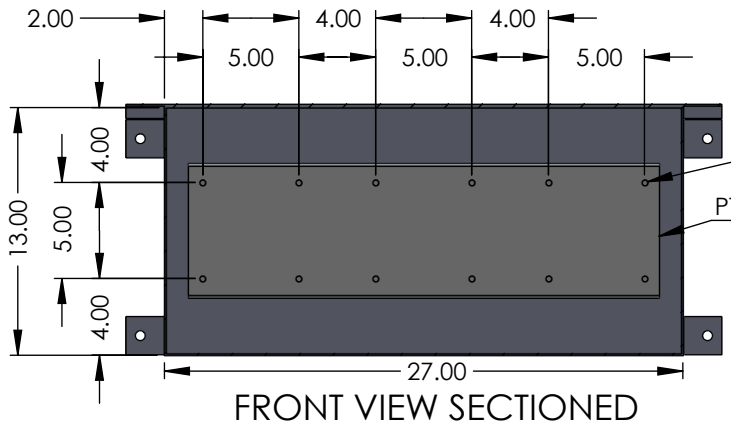

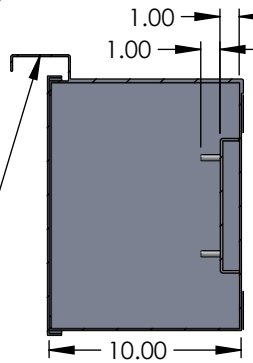

NOTES:

1. BOX AND COVER N3R CONTRUCTION - 14GA GALV SHEET STEEL.
2. FINISH: POWDER COAT GRAY ENAMEL.
3. STANDARD 0.75" LIP AROUND PERIMETER OF BOX OPENING.

	NAME	DATE
DRAWN BY	N. BOSETTI	11/11/2024
APPROVED BY		

PROPRIETARY AND CONFIDENTIAL
THE INFORMATION CONTAINED IN THIS DRAWING IS THE SOLE PROPERTY OF Nav-Tech Inc. ANY REPRODUCTION IN PART OR AS A WHOLE WITHOUT THE WRITTEN PERMISSION OF Nav-Tech Inc. IS PROHIBITED.

NAV-TECH INCORPORATED
155 MARCUS BLVD
HAUPPAUGE, NEW YORK 11788
PH: (718) 257-2111 FAX: (718) 257-2626

MAT'L: GALV STEEL
FINISH: POWDER COAT ANSI 61
WEIGHT:

ALL DIMENSIONS ARE NOMINAL UNLESS EXPLICITLY STATED OTHERWISE

DRAWING TITLE: O&R N3R PT BOX
PART #: NAV-OR-PTR
DESCRIPTION: NEMA 3R PT BOX 27" X 13" X 10" ORANGE & ROCKLAND ELECTRIC SPEC

DO NOT SCALE DRAWING | SCALE: 1:10 | *SIZE* A | *SHEET* 1 OF 1 | REV. 2