Weatherproof Screw Cover Boxes Types 3/4/12/13 Outdoor

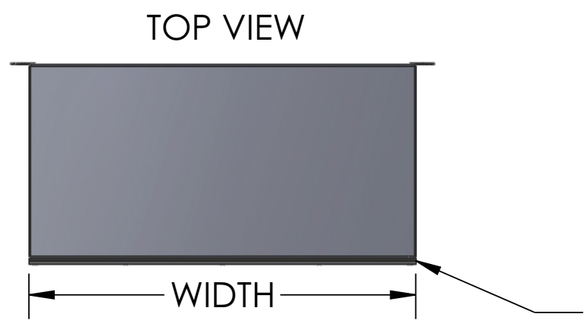

NOTES:

1. BOX AND COVER CONSTRUCTION- GALVANNEALED STEEL (CODE GA).
2. FINISH: ANSI 61 WRINKLE GRAY POWDER COAT.
3. CLOSED CELL FOAM GASKETED COVER.
3. STANDARD 0.75" LIP AROUND PERIMETER OF SC BOX OPENING.
4. ZINC COATED SCREWS AT CORNERS OF THE BOX AND EVERY 6.00" WHERE SPACE ALLOWS.

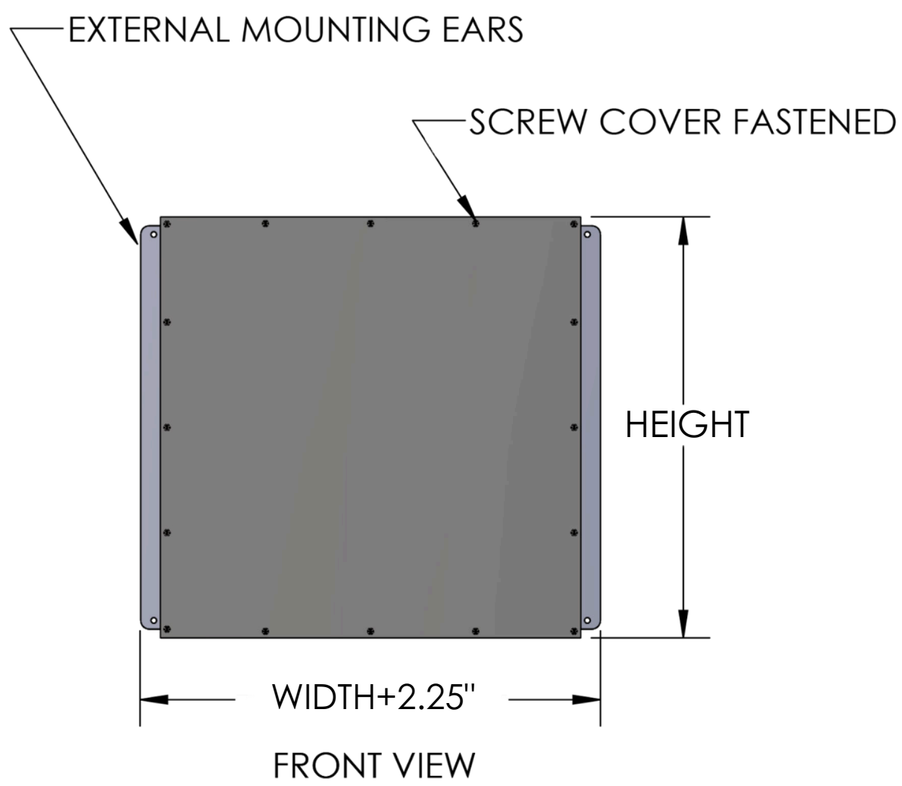

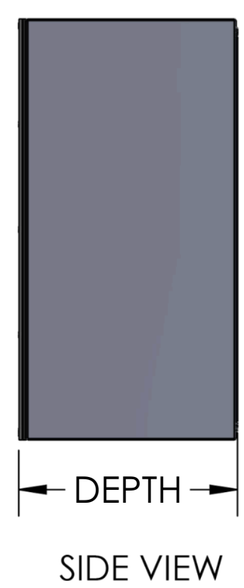

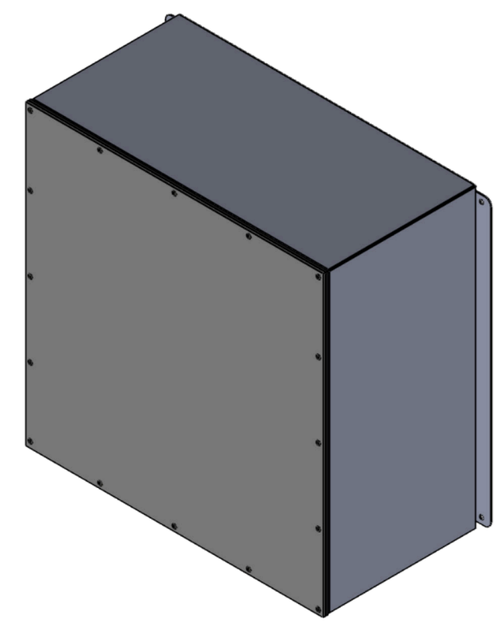

E160783 UL LISTED

Boxes, Junction & Pull
NAV-TECH INC.
HAUPPAUGE, NEW YORK

Features

- Enclosure and cover are manufactured from 16, 14, or 12 gauge G90 galvanized steel in accordance with UL Standards.
- All WPSC boxes come without knockouts and are continuously welded and ground smooth.
- Available with or without paint and in stainless steel.
- Covers are neoprene gasketed and fastened with plated screws.
- External mounting ears are standard.
- ANSI 61 wrinkle gray polyester powder coat standard finish.
- Available Accessories: Flush cover, replacement cover, extra screws, ground screws, back plates.

Application

- Designed for use as a junction box or pull box.
- For indoor or outdoor use to provide protection against dust, moisture, splashing and hose directed water.

- NEMA Types 3/4/12/13
- UL 50 Types 3/4/12/13
- CUL Types 3/4/12/13

Weatherproof Screw Cover Boxes Types 3/4/12/13 Outdoor With Back Plate

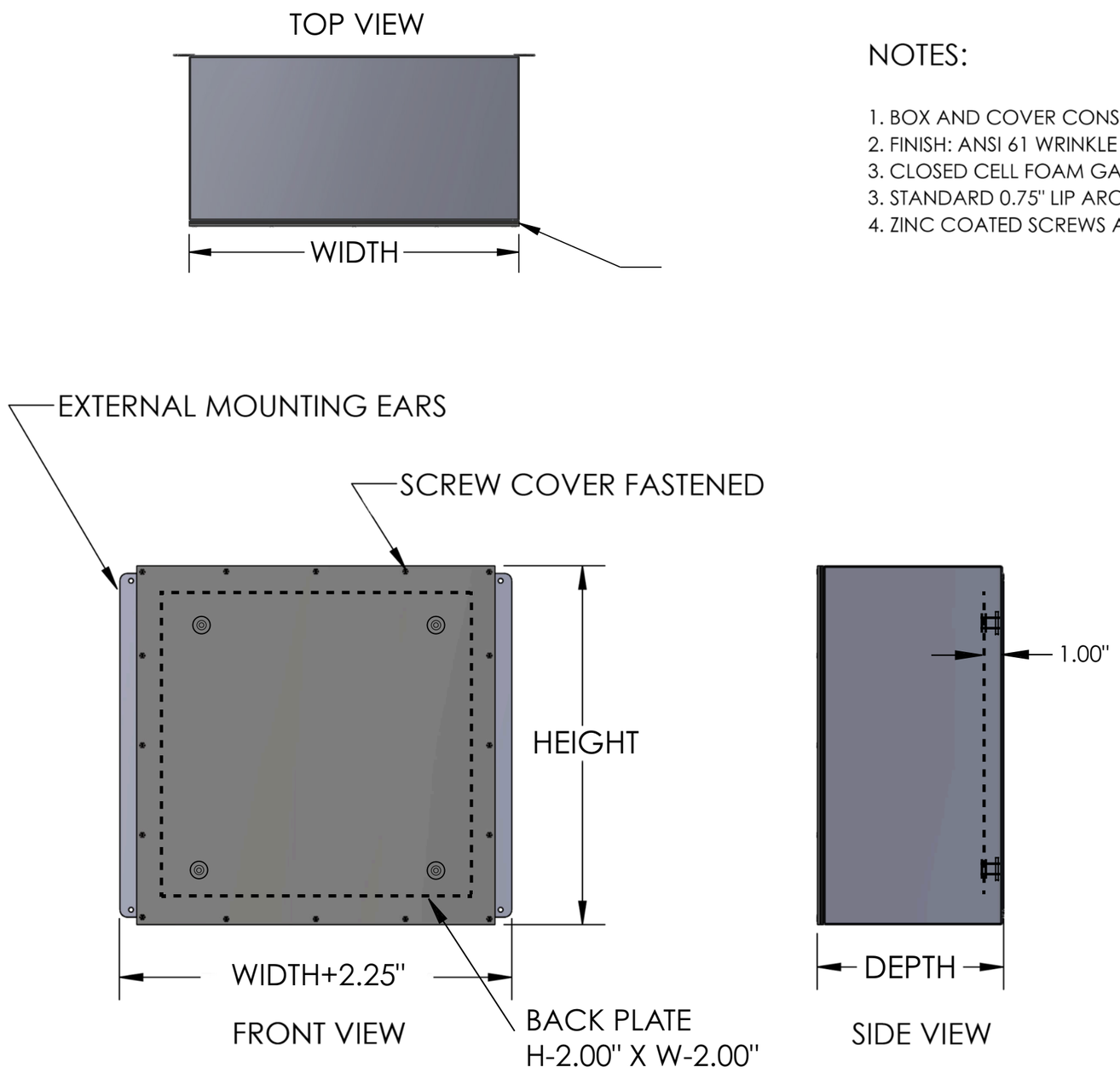

NOTES:

1. BOX AND COVER CONSTRUCTION- GALVANNEALED STEEL (CODE GA).
2. FINISH: ANSI 61 WRINKLE GRAY POWDER COAT.
3. CLOSED CELL FOAM GASKETED COVER.
3. STANDARD 0.75" LIP AROUND PERIMETER OF SC BOX OPENING.
4. ZINC COATED SCREWS AT CORNERS OF THE BOX AND EVERY 6.00" WHERE SPACE ALLOWS.

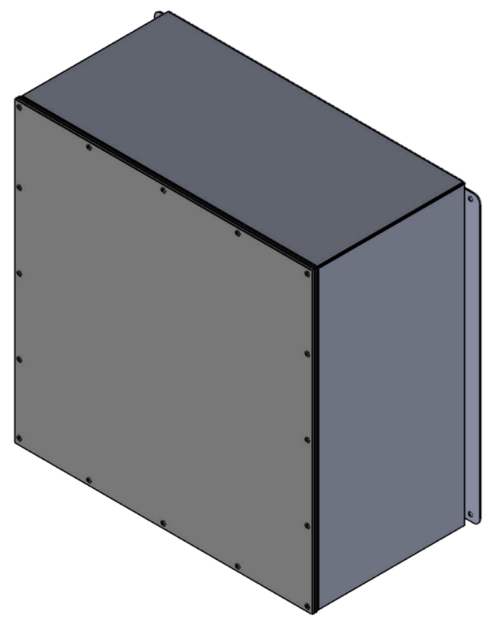

E160783 UL LISTED

Boxes, Junction & Pull
NAV-TECH INC.
HAUPPAUGE, NEW YORK

Features

- Enclosure and cover are manufactured from 16, 14, or 12 gauge G90 galvanized steel in accordance with UL Standards.
- All WPSC boxes come without knockouts and are continuously welded and ground smooth.
- Available with or without paint and in stainless steel.
- Covers are neoprene gasketed and fastened with plated screws.
- External mounting ears are standard.
- ANSI 61 wrinkle gray polyester powder coat standard finish.
- Available Accessories: Flush cover, replacement cover, extra screws, ground screws, back plates.

Application

- Designed for use as a junction box or pull box.
- For indoor or outdoor use to provide protection against dust, moisture, splashing and hose directed water.

- NEMA Types 3/4/12/13
- UL 50 Types 3/4/12/13
- CUL Types 3/4/12/13