National Grid CT Cabinets

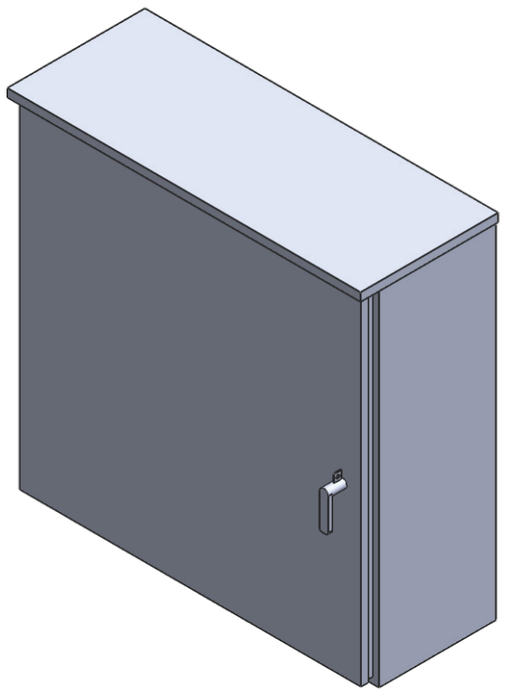

Features

- Enclosure body and cover constructed of galvanized steel.
- ANSI 61 gray polyester powder paint finish inside and out.
- Double door configuration with 3-point latch and padlockable handle.
- Single door configuration screw fastened with padlockable handle.
- Grounding stud for equipment grounding.
- Nema 3R Outdoor Shed roof Construction preventing rain water ingress.
- Gasketed Front Cover With provisions to hold doors open.
- Lift off hinges factory installed.
- No knockouts.
- Galvanized steel backplate factory installed.
- UL Listed.

Product Selection

	Part Number	Transformer Cabinet Size (Inches H x W x D)	Amperage (Amps)	Installation Type	Installation Voltage (Volts AC)
Single Hinged Door	NAV-NG-CTR-8	36 x 36 x 10	400	1-Phase 3-Wire	250
			800	3-Phase 4-Wire	600
Double Hinged Door	NAV-NG-CTR8-FD	36 x 47 x 10	400	1-Phase 3-Wire	250
			800	3-Phase 4-Wire	600